19.1" Flat Panel Industrial Displays

FEATURES

- **Industrial Grade** for demanding environments.
- **Precision-milled, Heavy-duty Bezels** ensure longer display life.
- **Polycarbonate Viewing Windows** are bulletproof and scratch-resistant.
- **Longlife Backlights** ensure trouble-free operation.
- **Multiple Touchscreen Options** for different applications and environments.
- **Easy upgrade of CRT to Flat Panel** without any cabinet modification.
- **Powder-coated 3/8" Thick Aluminum Bezels** are extremely durable and maintain appearance.
- **Polished Stainless Steel Bezels** are precision-milled from 3/16" plate.
- **Custom Colors and Private Labeling** for OEM manufacturers.
- **Available from Stock** in every configuration.
- **3 Year Warranty** on displays and electronics

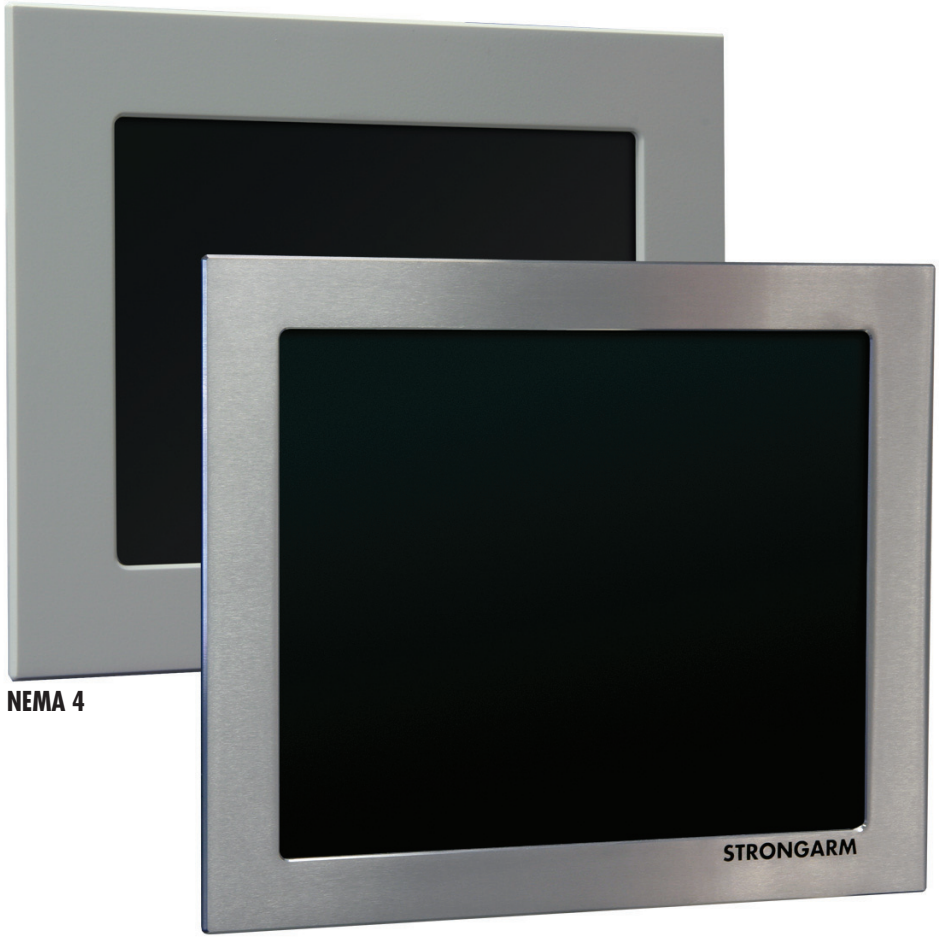

NEMA 4

NEMA 4X

Industrial Strength

STRONGARM's Flat Panel Displays are designed to survive the most demanding industrial applications. Because the display elements are built into precision-milled, solid aluminum or stainless steel bezels, they remain secure and free from stress. The possibility of life-shortening display deformation is significantly reduced when installed in a panel cut-out.

Current Technology

Unlike most other display offerings, STRONGARM displays are updated to the current technology immediately. You can be sure that the STRONGARM display you purchase today is not yesterday's trailing edge.

19.1" Flat Panel Industrial Displays

Touchscreen Specifications

Resistive Touchscreen ***(for 90% of all touchscreen applications)***

The Resistive Touchscreen uses a glass panel overlay with a uniform resistive coating. A polyester coversheet is tightly suspended over the top of the glass, separated by small, transparent insulating dots. The coversheet has a hard durable coating on the outer side and a conductive coating on the inner side. When the screen is touched, the conductive coating makes electrical contact with the coating on the glass. The voltages produced are the analog representation of the position touched.
The controller digitizes these voltages and transmits them to the computer for processing.

Touch Activation Force.....Less than 4 ounces, typical
Accuracy.....0.080 inches, typical; 0.180 inches, minimum
Touchpoint Density.....4096 x 4096 or > 100,000 touchpoints/inch
Temperature.....Exceeds display rating

Infrared Touchscreen ***(for applications where touchscreen is exposed to extreme abuse)***

The Infrared Touchscreen relies on the interruption of an IR light grid in front of the display screen. Integrated into the display bezel is an opto-matrix frame that contains a row of IR-light emitting diodes (LEDs) and photo transistors, each mounted on two opposite sides to create a grid of invisible infrared light. The opto-matrix frame is isolated from the outside environment by an IR transparent barrier. The IR controller sequentially pulses the LEDs to create a grid of IR light beams. When a stylus, such as a finger, enters the grid, it obstructs the beams. One or more of the phototransistors detects the absence of light and transmits a signal that identifies the X and Y coordinates. Because the infrared scanning is done in front of the display, a bulletproof, 3/8" thick polycarbonate window is installed between the IR grid and the display itself. This window provides a level of environmental protection for the electronics that is unique to the infrared touchscreen technology.

Touch Activation Force.....No minimum required
Accuracy.....0.047 inches (21 points/inch) typical, 0.22 inches (5 points/inch) minimum
Stylus.....¼ inch diameter, minimum
Display Window.....3/8 inch Lexan brand polycarbonate with Marguard surface treatment
Temperature.....Exceeds display rating

Surface Acoustic Wave Touchscreen ***(best optical clarity)***

The Surface Acoustic Wave (SAW) Touchscreen has a glass overlay with a grid of transmitting and receiving piezoelectric transducers. The touchscreen controller sends a 5 mHz electrical signal to the transmitting transducer, which converts the signal into ultrasonic waves within the glass. When the screen is touched, a portion of the wave traveling across it is absorbed, thus changing the received signal. The signal is then compared to a stored reference signal, the change recognized, and a coordinate calculated. The process happens independently for both the X and Y axes. By measuring the amount of the signal that is absorbed, a Z-axis is determined.

Touch Activation Force.....2 to 3 ounces (55 to 85 grams), typical
Accuracy.....Extremely consistent, very stable, no drift
Touchpoint Density.....4096 x 4096 touchpoints/inch
Temperature.....Exceeds display rating

Projected Capacitive Touchscreen ***(safest for all hazardous area applications)***

The Projected Capacitive touchscreen uses a capacitive field that works through 4mm of thermally toughened glass. This not only protects the sensitive electronics from exposure to the harsh environment outside of the enclosure, but unlike other capacitive touchscreens, will operate through many gloves. The electronic controller effectively divides the screen into sensing cells using micro-fine wires that are embedded into the outer glass, which is thermally toughened to withstand impact. These wires are connected to the touchscreen controller circuitry, and an oscillation frequency is established for each wire. Touching the glass causes a change in frequency of the wires at that particular point, the position of which is calculated and identified by the controller. The controller then outputs the x-y touch coordinate via a Serial or USB communication link. In most applications, a polyester anti-glare overlay is bonded to the outer surface to ensure that any breakage is contained in order to meet the requirements for food manufacturing and some pharmaceutical manufacturing. The polyester overlay can be omitted, upon request, when ordered.
The Projected Capacitive touchscreen is our most durable and vandal-proof offering.

Touch Activation Force.....No minimum required, user adjustable
Accuracy.....Excellent in center of screen
Touchpoint Density.....>1/mm2
Temperature.....Exceeds display rating

19.1" Flat Panel Industrial Displays

Dimensions

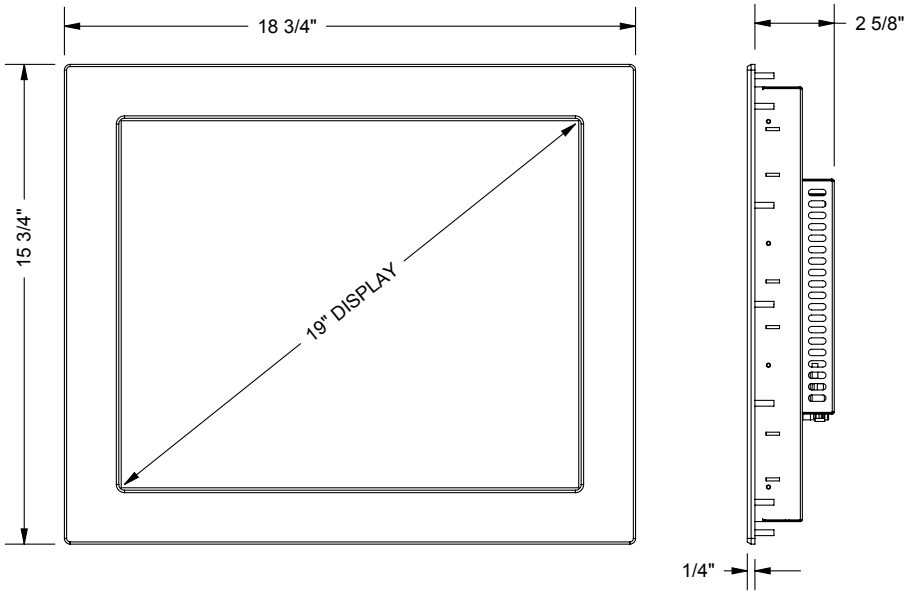

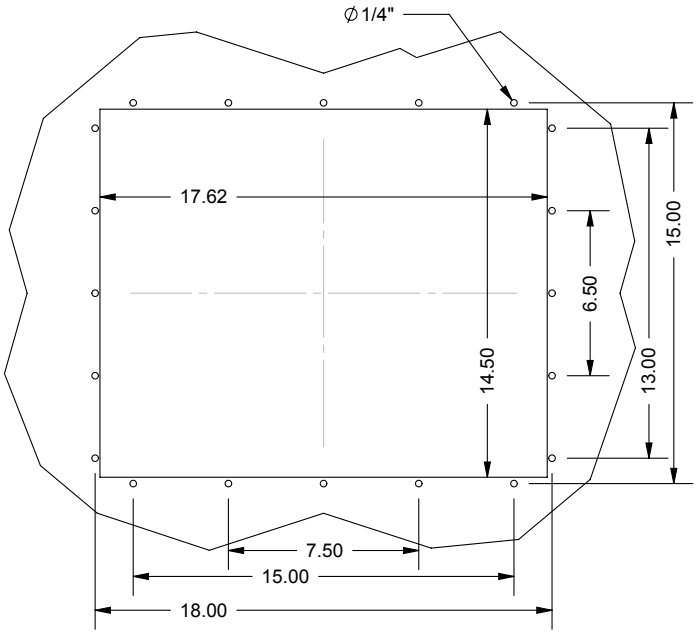

CUTOUT DETAIL

19.1" Flat Panel Industrial Displays

Specifications

		(HiBrite Display)	(Transflective Display)
Display			
Size:	19.1″	19.1"	19.1"
Brightness:	250 nits	700 nits	Up to 1000 nits
Contrast Ratio:	600:1	800:1	1000:1
Resolution:	1280 x 1024	1280 x 1024	1280 x 1024
Colors:	16.7 M	16.7 M	16.7 M
Power			
Consumption	34W	63W	34W
Input	AC 100-240V~ 50/60Hz	AC 100-240V~ 50/60Hz	AC 100-240V~50/60Hz
Environmental			
Operating Conditions			
Temperature	32°F to 122°F (0°C to 50°C)	32°F to 122°F (0°C to 50°C)	32°F to 122°F (0°C to 50°C)
Humidity	10 % to 80 % non-Condensing	10 % to 80 % non-Condensing	10 % to 80 % non-Condensing
Storage Conditions			
Temperature	-4°F to 149°F (-20°C to 65°C)	-4°F to 140°F (-20°C to 60°C)	-4°F to 140°F (-20°C to 60°C)
Humidity	5 % to 95 % non-Condensing	5 % to 95 % non-Condensing	5 % to 95 % non-Condensing

Ordering Information

□□□ – 1 9 1 □ □ 0

NEMA Series

304	NEMA 4/12
404	NEMA 4X

Touchscreens

0	None
T	Resistive
W	SAW
R	Infrared
P	Projected Capacitive

Transflective and HiBrite DisplayOption

0	None
H	HiBrite Display
T	Transflective Display

STRONGARM Designs, Inc. • 425 Caredean Drive, Horsham, PA 19044 • 215.443.3400 • FAX 215.443.3002 • **www.strongarm.com**
©2010 STRONGARM, Inc. STRONGARM, and the STRONGARM logo are registered trademarks of STRONGARM, Inc. All other trademarks are the property of their respective owners.
PUBLICATION NO. 104411REV6